ZOGOMETAL
Design made to last

4th km Koropi – Vari
Koropi Attiki Greece, GR 194 00
Tel. +30 210 6626465
Fax. +30 210 6623874

www.zogometal.com
email: info@zogometal.com

ILAVIO

DATA SHEET

ART NO.
3110

BACK to BACK

FINISHES

04 BRONZE

0618 NICKEL MAT/ INOX MAT

10 ORO MAT

MATERIAL

BRASS / SS 304

DIMENSIONS

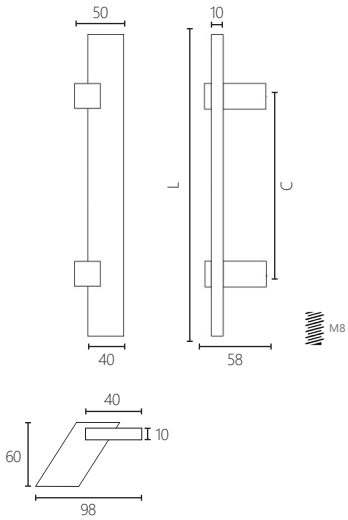

L	C
400mm	250mm
600mm	400mm
800mm	600mm
1000mm	800mm

* Customized Dimensions

ORIGIN

MADE IN ZOGOMETAL, VERTICALLY INTEGRATED UNIT PLACED IN ATHENS, GREECE
THE TOTAL OF PRODUCTION SEQUENCE IS BEEN CARRIED OUT WITHIN ZOGOMETAL FACILITIES INCLUDING ELECTROPLATING PROCESS OR POWDER PLATING PROCESS

ZOGOMETAL
Design made to last

4th km Koropi – Vari
Koropi Attiki Greece, GR 194 00
Tel. +30 210 6626465
Fax. +30 210 6623874

www.zogometal.com
email: info@zogometal.com

ILAVIO

CERTIFICATES

MTIC INTERCERT

CERTIFICATE

Αρ. Πιστοποιητικού / CERTIFICATE Nr. 12-Q-0411009-TIC

ΔΙΑ ΤΟΥ ΠΑΡΟΝΤΟΣ ΠΙΣΤΟΠΟΙΕΙΤΑΙ ΟΤΙ ΤΟ ΣΥΣΤΗΜΑ ΔΙΑΧΕΙΡΙΣΗΣ ΠΟΙΟΤΗΤΑΣ ΠΟΥ ΕΦΑΡΜΟΖΕΤΑΙ ΑΠΟ ΤΟΝ ΟΡΓΑΝΙΣΜΟ
WE HEREBY CERTIFY THAT THE QUALITY MANAGEMENT SYSTEM OPERATED BY

ΖΟΓΟΜΕΤΑΛ Α.Ε.Β.Ε.
4ο χλμ. Λεωφόρος Κορωπίου - Βάρης
GR-194 00 ΚΟΡΩΠΙ, ΑΤΤΙΚΗ, ΕΛΛΑΔΑ
ZOGOMETAL S.A.
4th km, Koropiou - Varis Avenue
GR-194 00 KOROPI, ATTIKI, GREECE

ΣΥΜΜΟΡΦΟΝΕΤΑΙ ΜΕ ΤΙΣ ΑΠΑΙΤΗΣΕΙΣ ΤΟΥ ΠΡΟΤΥΠΟΥ
IS IN COMPLIANCE WITH THE REQUIREMENTS OF STANDARD

DIN EN ISO 9001:2015

ΑΥΤΟ ΤΟ ΠΙΣΤΟΠΟΙΗΤΙΚΟ ΙΣΧΥΕΙ ΓΙΑ ΤΟ ΑΚΟΛΟΥΘΟ ΠΕΔΙΟ ΔΡΑΣΤΗΡΙΟΤΗΤΩΝ
THIS CERTIFICATE IS VALID FOR THE FOLLOWING ACTIVITIES

Παραγωγή ειδών κηπαλέριας
Production of ironmongery

No. ΕΚΘΕΣΗΣ ΕΠΙΘΕΩΡΗΣΗΣ / AUDIT REPORT Nr. RR-0624-Q-MTIC-MS-0411009-12

Ημερομηνία πρώτης έκδοσης / First issue date 01.06.2012 | Ημερομηνία αναθεώρησης / Revision date 27.05.2024 | Ημερ/νία λήξης / Expiry date 31.05.2027

IAF DAkkS

Bonn 27.05.2024 — Dipl.-Ing. K. Linsenhoff
InterCert Certification Body

InterCert GmbH - Group of HTTC – Am Benner Bogen 2 – 53227 Bonn GERMANY
www.intercert-group.org

MTIC INTERCERT

DIN EN ISO 9001:2015
Certificate No 12-Q-0411009-TIC

ZOGOMETAL follows **DIN EN ISO 9001:2015** for production of ironmongery. We hereby certify that the quality management system operated by ZOGOMETAL is in compliance with the requirements of this standard.

MTIC INTERCERT

CERTIFICATE

Αρ. Πιστοποιητικού / CERTIFICATE Nr. 12-E-0411009-MTIC

ΔΙΑ ΤΟΥ ΠΑΡΟΝΤΟΣ ΠΙΣΤΟΠΟΙΕΙΤΑΙ ΟΤΙ ΤΟ ΣΥΣΤΗΜΑ ΠΕΡΙΒΑΛΛΟΝΤΙΚΗΣ ΔΙΑΧΕΙΡΙΣΗΣ ΠΟΥ ΕΦΑΡΜΟΖΕΤΑΙ ΑΠΟ ΤΟΝ ΟΡΓΑΝΙΣΜΟ
WE HEREBY CERTIFY THAT THE ENVIRONMENT MANAGEMENT SYSTEM OPERATED BY

ΖΟΓΟΜΕΤΑΛ Α.Ε.Β.Ε.
4ο χλμ. Λεωφόρος Κορωπίου - Βάρης
GR-194 00 ΚΟΡΩΠΙ, ΑΤΤΙΚΗ, ΕΛΛΑΔΑ
ZOGOMETAL S.A.
4th km, Koropiou - Varis Avenue
GR-194 00 KOROPI, ATTIKI, GREECE

ΣΥΜΜΟΡΦΟΝΕΤΑΙ ΜΕ ΤΙΣ ΑΠΑΙΤΗΣΕΙΣ ΤΟΥ ΠΡΟΤΥΠΟΥ
IS IN COMPLIANCE WITH THE REQUIREMENTS OF STANDARD

DIN EN ISO 14001:2015

ΑΥΤΟ ΤΟ ΠΙΣΤΟΠΟΙΗΤΙΚΟ ΙΣΧΥΕΙ ΓΙΑ ΤΟ ΑΚΟΛΟΥΘΟ ΠΕΔΙΟ ΔΡΑΣΤΗΡΙΟΤΗΤΩΝ
THIS CERTIFICATE IS VALID FOR THE FOLLOWING ACTIVITIES

Παραγωγή ειδών κηπαλέριας
Production of ironmongery

No. ΕΚΘΕΣΗΣ ΕΠΙΘΕΩΡΗΣΗΣ / AUDIT REPORT Nr. RC-1224-E-MTIC-MS-0411009-12

Ημερομηνία πρώτης έκδοσης / First issue date 13.12.2024 | Ημερομηνία αναθεώρησης / Revision date 13.12.2024 | Ημερ/νία λήξης / Expiry date 12.12.2027

IAF DAkkS

Bonn 13.12.2024 — Dipl.-Ing. K. Linsenhoff
MTIC INTERCERT Certification Body

MTIC INTERCERT S.r.l. - Via Phoenix, 11 - 20017 RHO (MI) - ITALY
info@mtic-group.org

MTIC INTERCERT

DIN EN ISO 14001:2015
Certificate No 12-E-0411009-MTIC

ZOGOMETAL follows **DIN EN ISO 14001:2015** for production of ironmongery. We hereby certify that the environment management system operated by ZOGOMETAL is in compliance with the requirements of this standard.

Evidence of Performance
Lever handles and knob furniture as per EN 1906:2012

ift ROSENHEIM

Test Report
No. 24-002856-PR01
(PB-023-03-en-01)

Client: ZOGOMETAL SA, 4th km Koropi - Vari Avenue, 194 00 Koropi, Attica, Greece

Product: Lever handle set
Designation: Code 2331
Performance-relevant product details: Material handle: Brass; Storage: Rotatable - fixed; Spindle: 8 mm; Material of spindle: Steel
Installation: According to installation instruction from hardware manufacturer
Special features: -/-

Basis: EN 1906:2012
Testing standards: EN 1906:2012
Corresponds to the national standards (e.g. DIN EN)

Representation

Results
Classification according to EN 1906:2012

Category of use	Durability	Door mass	Fire resistance	Safety	Corrosion resistance	Burglary protection	Type, type design
4	7	-/-	0	0	4	0	B

Instructions for use
This test report serves to demonstrate the requirements of lever handles and knob furniture as per EN 1906:2012

Validity
The data and results given refer solely to the tested and inspected specimen. Classification remains valid as long as the product and its unique basic remain unchanged. The result can be extrapolated to other products if the specifications given in the product standard under the manufacturer's responsibility are met. The test report does not allow any statement to be made on further characteristics of the present structure regarding other requirements, in particular the effects of weathering and ageing.

Notes on publication
The IFI-Guidance Sheet "Advertising with IFI test documents" applies. The cover sheet can be used as an attached.
The report contains a total of 15 pages.

ift Rosenheim
17.07.2024

Konrad Quenzgibber, Dipl.-Ing. (FH)
Head of Testing Department
Security/Safety Testing

Erwin Hemhuhmer
Operating Testing Officer
Security/Safety Testing

ift Rosenheim
Theodor-Gietzen-Str. 11-15
83026 Rosenheim
GERMANY

+49 8031 261-0
info@ift-rosenheim.de
www.ift-rosenheim.de

Amtlich tätig DIN 17025
Accredited Test Laboratory
DE-PL-0000-11-TGG

accredited Test Laboratory
DE-PL-0000-11-TGG

DAkkS Deutsche Akkreditierungsstelle D-PL-0000-11-TGG

ift ROSENHEIM

EN 1906:2012

ZOGOMETAL follows **EN 1906:2012:** Building Hardware - Door Handles and Knobs - Requirements and test methods for the evaluation of its products.

Evidence of Performance
Fire resistance characterisation test for elements of building hardware

ift ROSENHEIM

Test Report
No. 18-001908-PR01
(PB-019-01-en-01)

Client: ZOGOMETAL SA, 4th km Koropi - Vari Avenue, 194 00 Koropi, Attica (Greece)

Product: Non-edge mounted items of building hardware
Designation: "47-B/0908"
Dimensions of specimen (W x H): 500 mm x 500 mm
Clear opening: mounted without frame
Material: wooden door
Lined: none
Type of opening: hinged doorset
Special features: none
Exposed face: symmetrical
Supporting construction: Standard supporting structure as solid structure with high density and a thickness of 175 mm

Basis
EN 1363-1:2012
EN 1363-2:2012
EN 1634-2:2000
EN 1634:2014
EN 13501-2:2016
Equivalent to the national DIN EN standards.

Representation

Fire resistance

Criteria	Test results
Integrity	43 minutes
Insulation	43 minutes
Termination of the test	in the 44 minute

Instructions for use
This test report serves to demonstrate the fire resistance of door and shutter assemblies. The test results do not provide any verification of applicability as set out by the relevant standards.

Validity
The data and results given refer solely to the tested and inspected specimen. Testing for other specimens and/or make any statement to be made on any further characteristics required by the construction of the construction submitted.

Notes on publication
The IFI Guidance Sheet "Conditions and Guidance for Use of IFI Test Documents" applies.
The cover sheet can be used as an attached.

Contents
The report comprises a total of 39 pages (incl. Annexes):
1 Scope
2 Procedure
3 Results
Annex (29 pages)

ift Rosenheim
24.01.2019

Andre Agerer Cand. Dipl.-Ing. (FH)
Head of Testing Department
Fire Safety

Sven Meyers, Dipl.-Ing.
Operating Testing Officer
Fire Safety

ift ROSENHEIM

EN 1634-1

ZOGOMETAL follows ift Rosenheim **EN 1634-1:** Fire resistance In the fire test in accordance with EN1634-2, the test specimen achieved the resistance times listed in the following overview.